Masszeichnung

Gewerbetiefkühlschrank OBERSTDORF 2 TK-2Z (R-290)

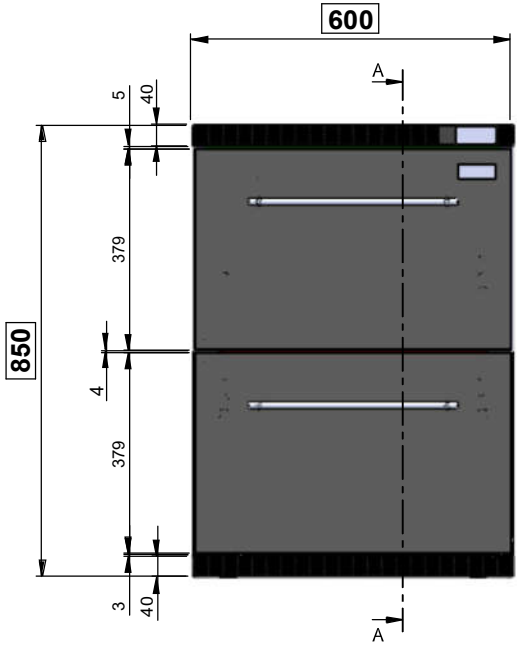

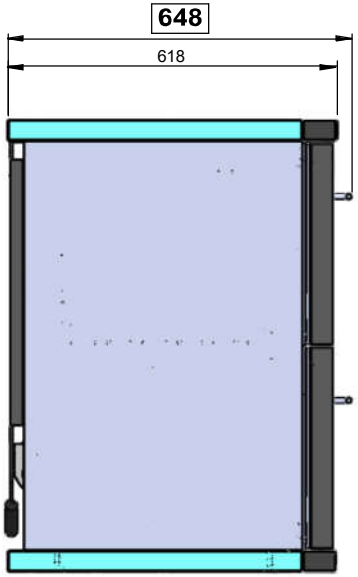

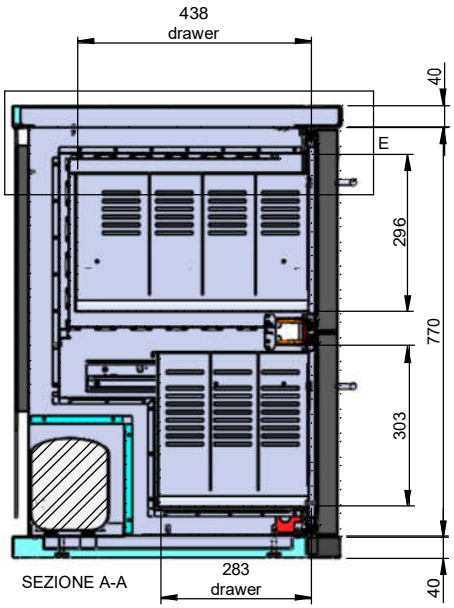

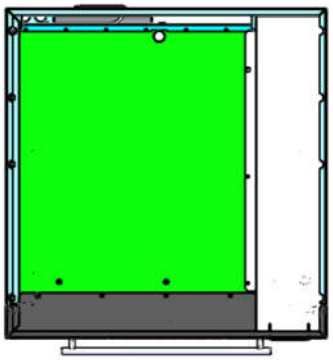

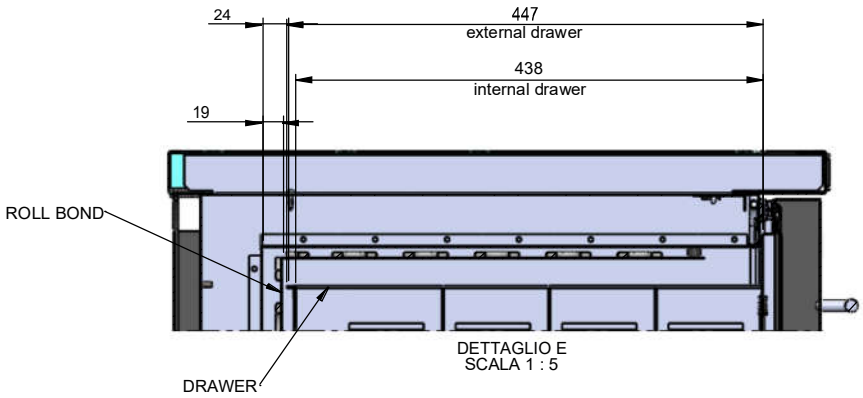

ARM. 140LT BT OBER. R290 PLAST. RAL 9005-O C/C. F57K02AL41

Stand: August 2024

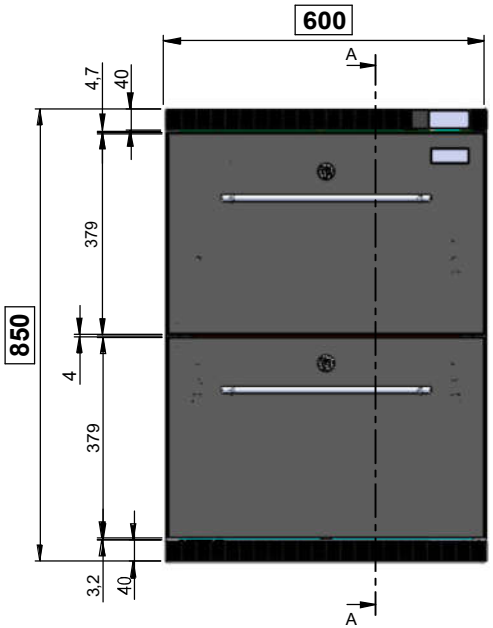

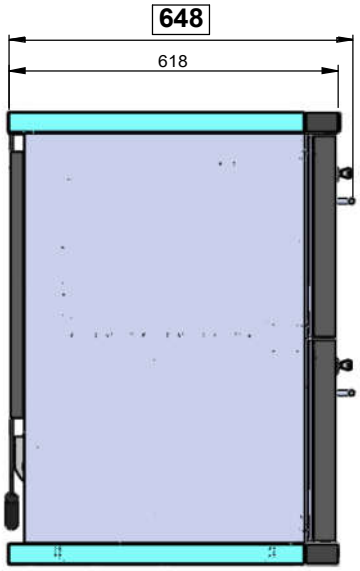

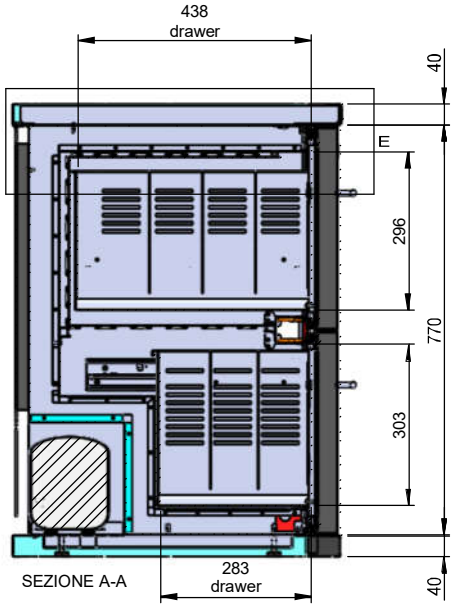

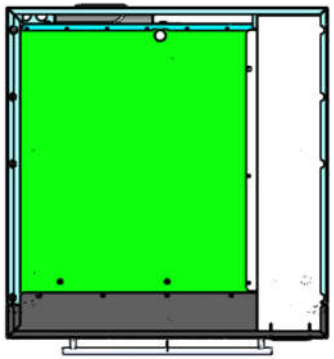

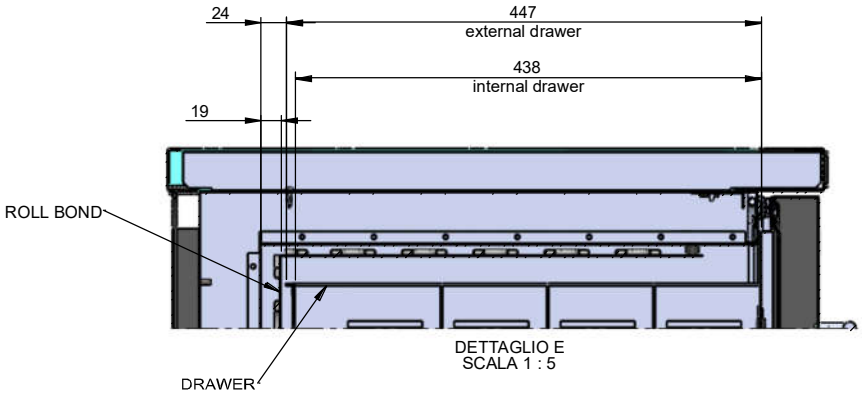

ARM. 140LT BT OBER. R290 PLAS. RAL 9005-O C/SERR. **F57K02AL32**

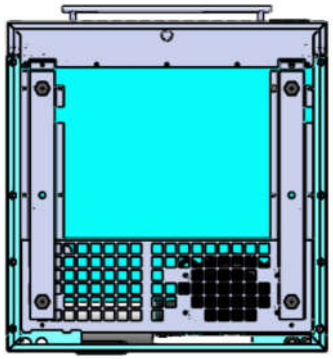

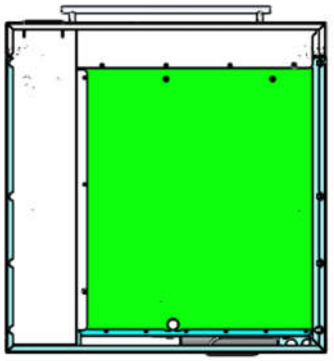

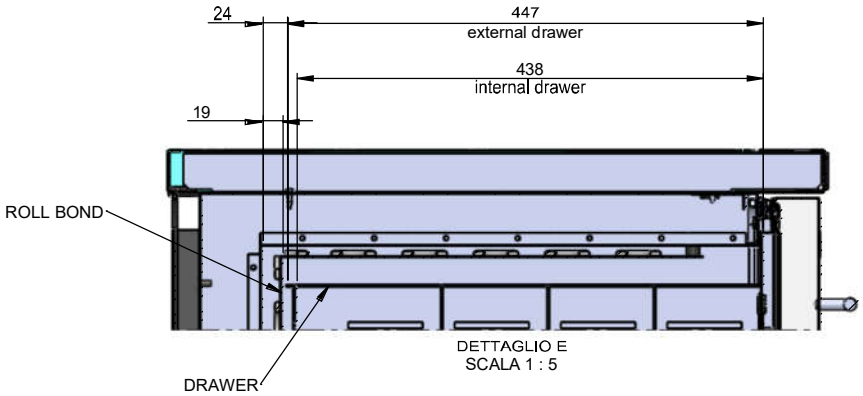
24
447
external drawer
438
internal drawer
19
ROLL BOND
DRAWER
DETTAGLIO E
SCALA 1 : 5

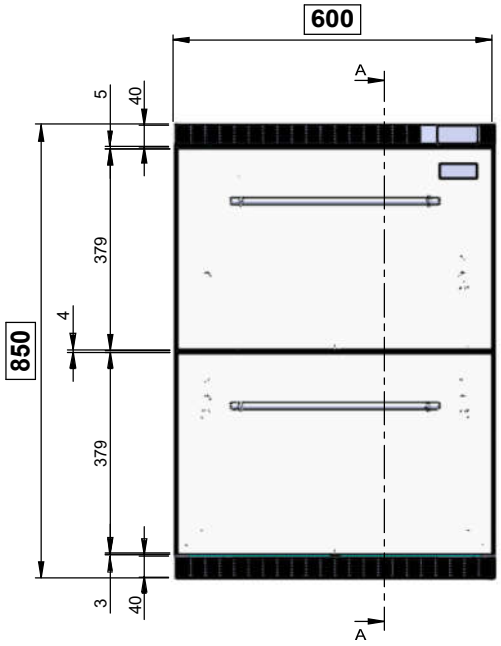
600
A
5
40
379
4
850
379
3
40
A

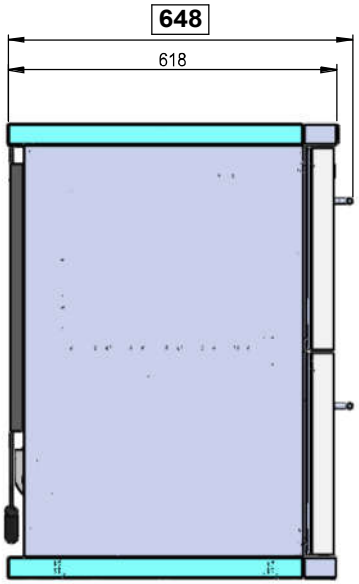
648
618

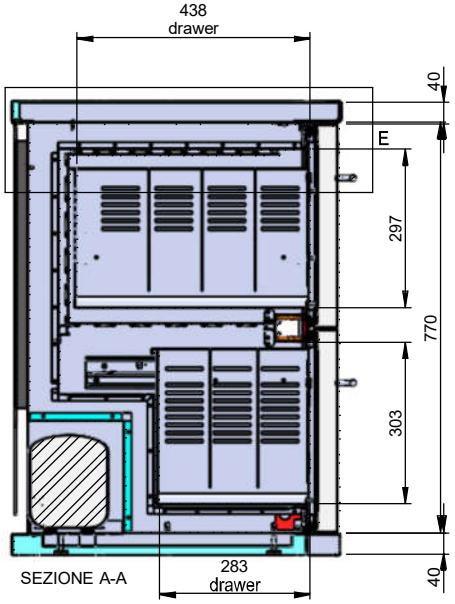
438
drawer
40
E
297
770
303
SEZIONE A-A
283
drawer
40

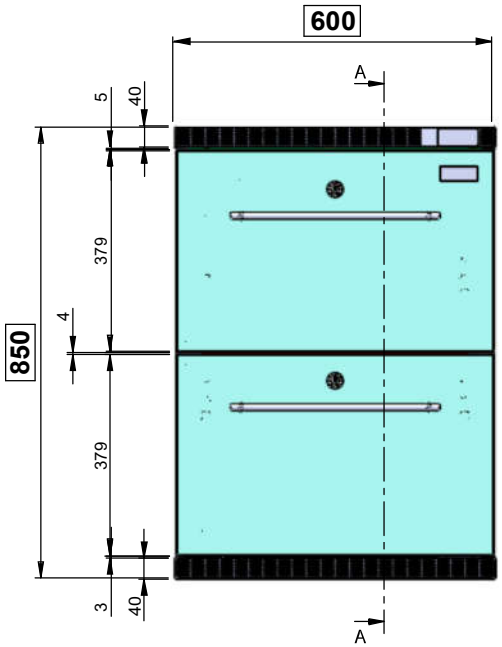
600
A
5
40
379
4
850
379
3
40
A

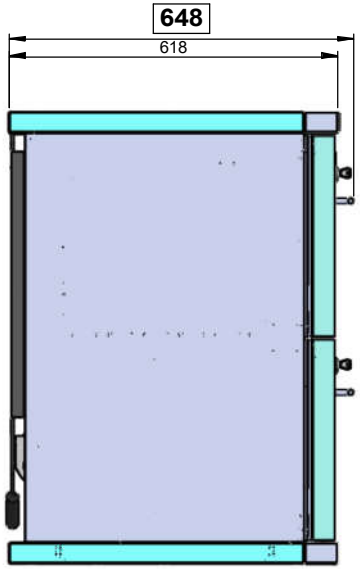
648
618

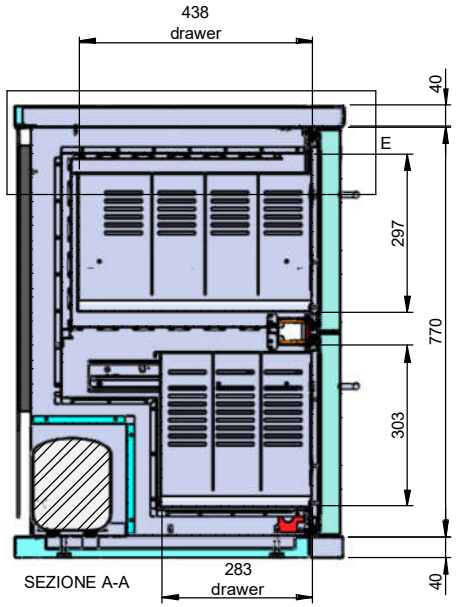
438
drawer
40
E
297
770
303
SEZIONE A-A
283
drawer
40

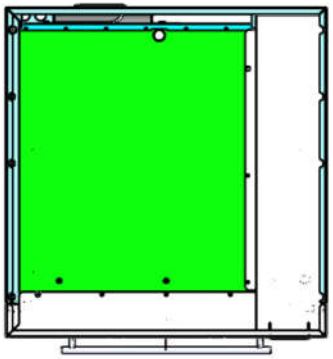

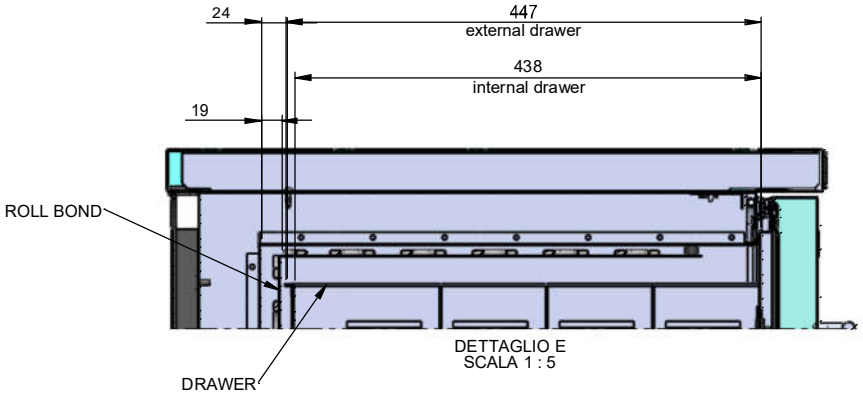
24
447
external drawer
438
internal drawer
19
ROLL BOND
DRAWER
DETTAGLIO E
SCALA 1 : 5